QUALITY AND SAFETY ASSURANCE BEST MANAGEMENT PRACTICE FOR THE STORAGE OF

LOOSE BULK WOOD PELLETS FOR SMALL AND MEDIUM SCALE CENTRAL HEATING SYSTEMS

BTEC Best Management Practice 1.0
September 24, 2015

CONTENTS

Introduction and Preliminary Note

Introduction:

This document was initially prepared by a volunteer industry committee affiliated with the Biomass Thermal Energy Council (BTEC) to help ensure safe, economical, and effective storage of bulk delivered loose wood pellets for small and medium scale heating systems. The document was presented as a set of technical Best Management Practices (BMP) intended to lead to a bulk pellet storage standard for small and medium scale heating systems after a significant period of industry use, review, comment, and revision. This document is based on the work of the original group and feedback received from the industry over a significant review period.

Preliminary Note:

This document is intended to set standards and make recommendations that will help bulk pellet distributors, traders, pellet appliance installers, bulk pellet storage installers, and bulk storage custodians safely store loose bulk wood pellets to ensure their effective use.

Through the text of this document, use of the verb "shall" will signify a topic upon which significant performance detail is provided; use of the verb should will signify a topic of recognized importance to the standard for which conceptual information is provided and for which the reader should seek more specific performance detail from other sources.

Recommendations for the delivery of wood pellets to the site of end use are made in a separate Biomass Thermal Energy Council Pellet Storage Recommendations document, "Wood Pellets: Quality and Safety Assurance For Transportation and Delivery."

This BMP will undergo a comment period in early 2015 by industry stakeholders. Comments will be considered for inclusion in future iterations of the BMP. Responses may be sent to BTEC at info@biomassthermal.org through March 6, 2015.

Scope

This standard applies to wood pellet fuel as defined in the Pellet Fuels Institute Standards Program and ENplus quality certifications . The document stipulates the means for safety and quality assurance for wood pellet fuel during the final stages of storage. The standard differentiates, where necessary,

between residential scale installations of less than 200,000 BTU/hr heat loads, and larger, light commercial and institutional scale installations. The standard is not intended to address storage of pellets at the industrial scale. It is intended for all who store or create storage units for residential, light commercial, and institutional central pellet heating systems. Those storing pellets on a commercial scale should be aware of potential hazards beyond the scope of this document.

BTEC and the BMP's contributors assume no liability for this document's implementation, and users assume all risks associated with bulk wood pellet fuel production, storage, and delivery.

TERMS AND DEFINITIONS

For the use of this document, the following definitions apply:

Auger: A rotating screw within a full or partial housing used for the delivery of a material from one point to another.

Bin: A vessel designed to receive, store, and discharge pellets in a controllable manner . Usually smaller than a vertical silo.

Bulk Storage Custodian: Any entity or individual, operator or owner, responsible for bulk wood pellet fuel storage structures.

Carbon Monoxide (CO): A colorless, odorless, toxic flammable gas. Carbon monoxide can be found in concentrations ranging from non-threatening to lethal in pellet storage areas as a result of the conversion of products found in natural wood. Carbon monoxide can affix itself to red blood cells thus blocking normal absorption of oxygen and causing long term illness, acute sickness, or death.

Confined Space:
Per OSHA

- Is large enough for a person to enter fully and perform a task
- Is not designed for continuous occupancy by the person
- Has a limited or restricted means of entry or exit
- May include underground vaults, tanks, storage bins, pits and diked areas, vessels, silos, or other similar areas.

By definition, a **permit required confined space** has one or more of the following characteristics:

- Contains or has the potential to contain a hazardous atmosphere
- Contains a material with the potential to engulf someone who enters the space

- Has an internal configuration that might cause an entrant to be trapped or asphyxiated by inwardly converging walls or by a floor that slopes downward and tapers to a smaller cross section
- Contains any other recognized serious safety or health hazards

Delivery truck: A truck, trailer or equipment designed to transport wood pellets. See Figure #1 in Appendix.

Dust: Wood particles smaller than 100 microns which settle from the air over time.

Fines: The fuel material in the fuel sample passing through a 1/8 inch screen

Fines percentage: The percentage of fuel material in the fuel sample passing through a 1/8 inch screen when the fuel is sampled in accordance with the Pellet Fuels Institute Standard Specification for Residential/Commercial Densified Fuel.

Operator: Any entity or individual that delivers, or stores, bulk wood pellet fuel.

Pneumatic Delivery Hose: Either a flexible or rigid airtight plastic, rubber, or metallic tube used for conveyance of fuel by pressure difference.

Point of Origin: The pellet manufacturing facility.

Point of Secondary Storage: The last wood pellet storage prior to truck transport.

Redistribution Facility: Any storage facilities or containers between production and pellet storage at the end-user premises.

Trickle Ventilation: low volume, continuous, passive ventilation intended to foster gaseous exchange.

Vertical Silo: A weatherproof storage vessel, typically factory built, that stands vertically on legs or skirts. Vertical silos generally use gravity to allow stored material to flow to a delivery point at the base of the silo. See Figure #2 in Appendix.

Wood Pellet Storage: Any storage device or structure for wood pellets including, but not limited to steel silos, cloth bins, custom built wooden bins or bunkers, and underground tanks. See Figure #3 in Appendix.

References and Regulatory Standards

Those storing pellets on a commercial scale must be aware of potential hazards beyond the scope of these standards. Listed below are some references to rules relating to some of those hazards. (This list is not intended to be complete):

1910.1200 Hazard Communication
1910.132 Personal Protective Equipment
1910.38 Emergency Action Plans
1910.94 Ventilation
1910.134 Respiratory protection
1910.147 Lockout/Tagout
NFPA 68 explosion venting
NFPA 69 explosion suppression
NFPA 91 ventilation
NFPA 13 sprinkler systems/15 sprinkler systems
NFPA 72 fire alarms
NFPA 70 NEC (for NFPA 499 electrical classification and NFPA 77 static electricity)
NFPA 80 Standard for fire doors and other openings (equates somewhat to ONORM B 3850)

General Storage Standards

Fuel

Fuel.1 End Use Fuel Storage

Storage Volume Recommendations

In determining the size of a new storage unit many factors should be considered. Assuring an adequate supply of pellet fuel for the heating system requires an understanding of volumes of pellets consumed at anticipated firing rates, the reliability and timeliness of fuel delivery from available bulk delivery sources, the likelihood of delivery delays due to inclement weather, holidays, supply shortages, or other factors, and the minimization of delivery load numbers and maximization of delivered volumes to reduce the costs associated with delivery transportation.

Larger users should consider the economic benefits of full truck deliveries and the fuel availability assurance of larger stored volumes. See Figure #4 in Appendix.

Ideally, installations consuming less than 30 tons/year should have fuel storage adequate for an entire heating season and at least require no more than four pellet deliveries per year unless the storage unit can take full truck loads at each delivery.

The bulk pellet storage system shall be capable of receiving delivery under pneumatic pressure and holding, at a minimum, the volume of pellets necessary to allow refilling in a weight increment acceptable to local bulk fuel delivery agents without requiring the bin to be empty prior to delivery. [1,2] .

[1]Calculating Fuel Storage Size at Point of End Use: Assuming a minimum bulk pellet delivery to be two tons, and consumption down to one remaining ton before refill, the following chart provides minimum storage capacities for new construction and for boiler replacement installations.
[2]Each storage unit, including rigid and flexible silos, should be fully emptied once per year to remove normally occurring dust accumulation

Heat load/hour	1 fill/year	2 fills/year	3 fills/year	4 fill/year
20,000 BTU/hr	3.5 tons	3 tons	--	--
40,000 BTU/hr	7 tons	4 tons	3 tons	--
80,000 BTU/hr	14 tons	8 tons	5 tons	4 tons
160,000 BTU/hr	28 tons	15 tons	10 tons	8 tons

Larger installations will receive more deliveries per heating season than the smaller installations indicated above. In any case, the storage for those installations shall be capable of holding 1.3 times the volume of the delivery vehicles used to service the installation. This will allow for sufficient fuel to remain when ordering a full truckload delivery of fuel.

Fuel.2 End Use Documentation

Upon delivery of bulk pellets, end users shall be provided with a delivery document. The delivery document shall provide:

- The certified grade of the pellet fuel (PFI, ENplus, or other).
- Site of load out for local delivery truck
- Delivery weight
- Unit price, total price and delivery date

See Figure #5 in the Appendix for a sample delivery document.

DELIVERY PRECONDITIONS

Delivery.1 Central Heating Appliance

If required by the appliance manufacturer's installation manual, the delivery personnel shall confirm that the heating appliance(s) connected to the bulk pellet storage device is(are) inoperative prior to beginning pneumatic delivery. The appliance shall be returned to operating condition after delivery is complete. For mechanical deliveries using augers it is not necessary to turn off the heating appliance.

Delivery.1.1 If rendering the appliance inoperative prior to fuel filling is required by manufacturer's installation manual, all such central heating appliances installed on, or after, October 1, 2014, shall have an external switch to which the delivery personnel has access to disable the appliance during delivery. The switch shall be lockable to prevent tampering and shall have a combination or master key that the delivery company has to enable deliveries that are unattended by the property owner.

Delivery.2 Storage device

The delivery personnel shall ascertain the following prior to delivery:

Delivery.2.1 For first time deliveries

i. Any access ways into the storage area are closed unless such access ways are designed as vents for use during the filling process
ii. There is sufficient headroom above flexible bins or silos to allow for the normal pressurized expansion of the bin or silo.
iii. Permanent filler and vent pipes are properly installed and have mechanical integrity
iv. Filler and vent pipes are correctly labeled
v. The storage unit is properly grounded
vi. Verifying size and shape of pellet storage device
vii. Visually monitor a new storage device until filling is complete

Delivery.2.2 For all deliveries

i. The storage device has enough spare volume to accept the anticipated delivery*

* It is not necessary for delivery personnel to enter the storage room during each delivery if they are familiar with the storage unit and they have a reliable means of determining when the storage unit is full.

Delivery.3 Fill and Suction Connectors and Piping for Pneumatic Filling

Delivery.3.1 Type

.3.2.1 Connectors shall be four (4) inch Camlock. See Camlock connections in Figures #6.1 – 6.2 in the Appendix

.3.1.1 Fill connections shall be male fittings. Suction connections shall be female fittings.

.3.1.2 If multiple fill or vent connections are located together, they shall be marked with a permanent placard indicating discharge or suction configuration.

Delivery.3.2 Assembly /Installation Recommendations

.3.2.2 Non-vented caps shall contain a gasket to prevent intrusion of any foreign matter, with special care being taken to avoid water. Vented caps for passive ventilation of the storage space shall prevent intrusion of water or foreign matter while allowing normal gaseous transfer. Vent and fill connectors shall be protected from water sources such as roof drip edges and snow piles. Pipe and fitting connections shall be watertight. When possible, fill pipe stubs on the exterior of a building should be fixed at a downward angle to prevent water entry, no extra bends in the fill pipe should be used to create this downward angle.

.3.2.3 Couplings and joiners shall not interrupt smooth flow of wood pellets.

.3.2.4 Couplings and joiners shall be sealed and shall maintain electrical grounding from pipe section to pipe section.

.3.2.5 Steel is the preferred material for permanently installed delivery pipe material for rigidity, durability and smoothness. Under no circumstances shall plastic pipe without static dissipative properties be used.

.3.2.6 All connections shall be closed with gasketed Camlock plugs or caps, vented caps when necessary, between fillings.

.3.2.7 Pipes and/or connectors shall be firmly fixed to prevent twisting and other movements during the filling process. Connections shall support , without deflection, the weight of the pellet filling hose.

.3.2.8 If is strongly recommended that, acoustic isolation shall be used when fixing fuel delivery pipes and fittings to buildings.

.3.2.9 Fill piping should be as short as possible and contain as few bends as possible.

.3.2.10 The fill connectors should lead to the outside when possible. Installations shall have fill connectors mounted outside the property so that they are accessible for deliveries that are unattended by the property owner. Maneuvering clearance shall be provided for coupling of the fill and vent hoses.

.3.2.11 The fill and vent connections should ideally be located at waist height (approximately three (3) feet) from the ground, but in any case shall be no higher than six (6) feet from the ground.

.3.2.12 Fill pipes shall be located to ensure maximum loading of the pellet bin.

.3.2.13 Fill pipes shall be located to protect bin surfaces, to protect pellets from damage, to ensure vents aren't blocked with pellets, and to fill bin to maximum.

.3.2.14 Vent pipe openings in a storage area shall be flush with the wall of the storage device

Delivery.3.3 Static Electricity

.3.3.1 Metallic piping that maintains electric continuity from piece to piece for the purpose of electrical grounding is preferred for all fill and suction connectors and associated piping. If

connectors and piping are non-metallic, they shall maintain electrical continuity by other means such as integrated ground wires or multiple grounding connections if necessary.

.3.3.2 Fill and suction connectors and associated piping must be permanently electrically connected to a copper grounding rod and to the storage bin.

Delivery.3.4 Materials

.3.4.1 Fill and suction connectors and associated piping should be strong enough to withstand the abrasion of wood pellets and the vibration experienced during filling.

.3.4.2 Fill and suction connectors and associated piping should be rigid enough to be held fast without crushing.

ACCESS FOR TRUCK AND PERSONNEL- ALL APPLICATIONS

Access.1 Delivery trucks should have sufficient access to connect to the storage device with less than one hundred (100) hose feet. Keeping the distance between the delivery truck and the storage as short a possible is best practice for ease of delivery and for reducing damage to wood pellets.

Access.2 Overhead clearance from the travelled way to structures and wires overhead shall be twelve (12) feet or more.

Access.3 A road width of one rod (16 ½') is recommended for delivery truck access, however a minimum road width of twelve (12) feet is required.

Access.4 Pellet delivery pipe shall be installed permanently and run from bulk storage to the closest point of access for the delivery truck.

Access.5 Bulk storage custodians shall keep access for delivery personnel clear of snow and other debris. Pellet delivery hoses are heavy and are typically assembled in sections, which must be kept clean and dry.

Access.6 If the appliance on site requires deactivation prior to delivery of fuel, delivery personnel need access to the wood pellet burning appliance and/or to the wood pellet storage at time of delivery.*

Access.7 Wood pellet fill and vent connections should be located with regard for snow build up both from snow removal processes and roof shedding.

***** When delivery personnel must have access to the wood pellet burning appliance and storage unit during the first delivery to the site, subsequent deliveries can be made unattended assuming there is a switch at the fill ports for disabling and restarting the boiler.

General Criteria for Proper Wood Pellet Storage (All Types of Storage)

Dust/Static Electricity/Explosion Management

The design and location of the storage facility (referred to here as "bin") shall take into consideration minimizing the risks and consequences of dust explosions. Keeping the area around storage units free from dust accumulation is imperative in maintaining safe conditions.

Design Criteria

Design.1 Grounding of the bin and the fill and vent lines is required. Delivery hoses or augers should have easy access to grounding points. All electrically-conducting parts of the bin, including the tank cap and all connection fittings, and the fuel feed system must be grounded. Since electrostatic charge is possible, the bin is to be constructed so that any ignition through electrostatic sparking is prevented.

Design.2 No electric lines can be routed through the bin. Electric lines in close proximity to the bin and that have any potential for dust contamination shall be run, terminated, and contained in keeping with all relevant codes.

Design.3 Explosion hatching or relief shall be designed into rigid bins.

Location Criteria

Location.1 The location of the bin shall take into consideration how a delivery truck will load the bin. Decreasing distance between the delivery truck and the bin will decrease fines generated by delivery.

Location.2 If a hose is used to fill a bin, its length shall be no longer than 100 feet. See Figure #7 in the Appendix for a plan view of delivery truck with hose deployed in driveway.

Location.3 The location of the bin should take into consideration the consequences of a catastrophic event and the effect on the area surrounding the bin.

Location.4 Floor joists above a cloth storage unit should be covered with plywood, or a similar sheathing, to prevent damage to the storage unit and/or pellets during pneumatic delivery.

Wood Pellet Fines (Not Dust) Management

Fines.1 To the extent possible, bins and fill piping shall be constructed to minimize the accumulation of fines.

Fines.2 To the extent possible, the fuel feeding system from the bin to the heating device shall have the capability to transport a "reasonable" amount of wood pellet fines delivered in the normal course. The bin shall have an access point for cleaning wood pellet fuel fines and dust which may accumulate inside of the bin. All access points to the bin shall be airtight.

Fines.3 If recommended by the boiler manufacturer, pellet fines and dust shall be cleaned from the storage unit at least once annually, and more often if deliveries contain high fines proportions, to reduce accumulation of fines which may affect the free flowing nature of the pellets.

Water-Moisture Avoidance and Contamination

Wood pellets must be stored in storage facilities that are covered on all sides, such that wood pellets are kept dry at all times. Particularly, wood pellets shall be protected against direct rain, snow and wet walls or condensation. Storage surfaces must be free from contamination (e.g. grit, soil, sand). Procedures for filling the bin shall prevent moisture from contaminating the bin. Condensation shall be considered in the design and operation of the bin.

Electricity and Plumbing In and Around Wood Pellet Storage

E&P.1 No electric lines shall be routed through the bin. Lights installed in storage bins shall comply with all codes relevant to installation in a dust environment. Electric lines in close proximity to bin and that have any potential for dust contamination shall be installed in compliance with all codes relevant to a dust laden. The bin shall be grounded.

E&P.2 An electrical outlet with proper voltage and circuit breaker protection of required amperage shall be accessible in the immediate vicinity of the fill connections for bins that require suction blowers for filling.

E&P.3 Plumbing lines shall not be located such that leaks or pipe failure contaminate stored wood pellet fuel.

E&P.4 No electrical fixtures or plumbing lines shall be above a cloth storage unit.

Fire safety

The following shall apply for storage units of greater than 10 US tons capacity in occupied buildings:

FireSafety.1 A plan showing how to contain a fire in a bin should be developed with the express goal of safely handling a potential fire. A smoke and heat detector should be installed in close proximity to the bin. A fire extinguisher, located close to the entry point of the bin area, should be installed.

FireSafety.2 Any deluge or sprinkling system should take into consideration the expansion of wet pellet fuel and the resulting affect to the structure of the bin.

STRUCTURAL SAFETY

Structural.1 The bin shall be placed on such foundations, slabs or flooring capable of handling the static load of a fully loaded bin.

Structural.2 The entire bin shall be constructed to withstand both a full load of pellets and the maximum pressures encountered during pneumatic loading.

HUMAN/OCCUPATIONAL SAFETY

CARBON MONOXIDE MANAGEMENT FOR BULK PELLET STORAGE IN OCCUPIED OR UNOCCUPIED BUILDINGS

CO.1 In occupied buildings, small (<10 US tons) bulk pellet storage units and solid or gas permeable tanks for bulk pellet storage must be passively ventilated in order to avoid unacceptable CO concentrations. All ventilation openings must lead to the outside. For purposes of this standard ≤8 ppm shall be considered the maximum allowable concentration of CO in an occupied building. This air quality standard is based upon minimum safe habitation standards published by OSHA, ASHRAE, and others.

CO.2 Occupied buildings in which bulk pellets in non-air-tight storage units are stored shall have at least two ventilation ports, or the equivalent ventilation, to the outside of the building to permit trickle ventilation to dissipate CO released from the pellets in the storage unit. The ventilation ports shall be installed to maximize generally prevailing temperature, pressure and wind differences on the outdoor side of the two ports. The ventilation ports shall each have cross-sectional areas as below:

Tons storage		**Cross-sectional area of each ventilation opening**	**Diameter if circular opening**

1		3.0 sq in	2”
2		6.0 sq in	2.75”
3		9.0 sq in	3.5”
5		14.5 sq in	4.5”
10		29.0 sq in	6.0”

CO.3

CO.4 The ventilation must be constructed so that the ventilation function is established with the least possible pressure drop.

CO.5 Ventilated fill connectors may be all or part of the passive ventilation system depending upon their ventilation cross-sectional area and their placement as required in **CO.2**. Ventilation openings shall be constructed so that dust will not plug the venting during delivery.

CO.6 All storage units shall be vented to the outside with vents that prevent moisture contamination and tampering.

CO.7 Rooms with storage tanks made of gas permeable fabric shall have two ventilation openings that lead to the outside. These can be the same openings that provide make-up air for the boiler if the source is external and the ventilation may partially meet the ventilation requirements of CO.2. A Carbon Monoxide detector shall be installed in close proximity to the storage unit.

CO.8 A storage unit shall be defined as a “Confined Space” (OHSA reg) and entry shall be limited. The storage unit shall be properly ventilated and fresh air supply verified prior to entry.

MECHANICAL SAFETY-AUGERS AND STIRRING DEVICES

Mech.1 Noise/Acoustic Management

Mech.1.1 Storage and feed systems shall be constructed so as to prevent the transmission of sound to the building.

Mech.1.2 In bins with feed augers, the joints between the sloping floors and augers should be arranged so that the transmission of structure-borne sound is minimized. Consult with experienced engineers for best practices.

Mech.2 Abrasion management

Mech.2.1 Abrasion protection methods shall be used to protect bin surfaces and to protect pellets from damage. A free-hanging abrasion and crack-resistant impact sheet attached perpendicular to the direction of fill during pneumatic filling on or in front of the wall opposite to the fill connection, has been shown to be an effective method to protect the pellets from breakage and the storage unit from abrasion in some bin types. See Figure #8 in the Appendix for an illustration. In such cases, an HDPE sheet with

thickness of at least 1 mm and dimensions of 1.5 meters square per fill connector has been proven effective.

INTERIOR SLOPES

Any sloping bin floors should be constructed with a pitch of at least 45 degrees, or more. Steeper pitches are better for fuel movement, but decrease storage volume. The sloping floor must not deform under the static load and is to be constructed with a smooth, durable material. In order to allow unimpeded flow of pellets into the auger system, edges and ridges are to be avoided. See Figures #9.1 – 9.2 in the Appendix for illustrations of sloping floors.

LABELING/PLACARDS/SIGNS

Label.1 A readable and permanent warning sign must be posted on the entry door to a site built storage unit or on the structure of a storage vessel, which shall give notice as to the danger of entering the storage space and which provides procedures for such entry. See Figure #10 in the Appendix for an example wood pellet storage room safety placard.

Label.2 The warning sign must include at least the following warning and procedural instructions:

- **.2.1** Unauthorized entry is forbidden, children are to be kept away. "Confined Space" in commercial applications.
- **.2.2** Dangerous CO concentrations are possible.
- **.2.3** Entry to the storage system is allowed only under safety procedures.
- **.2.4** Smoking, fire and other ignition sources are forbidden.
- **.2.5** Ventilation is required for 15 minutes prior to entry and such ventilation is to be maintained during entry.
- **.2.6** Injury hazard from moving parts (e.g., auger, agitator, spring arm).
- **.2.7** Pellet-fired system is to be switched off prior to entry. While working in the fuel storage bin adequate respiratory protection shall be worn to prevent dust inhalation.

STORAGE BIN SPECIFIC REQUIREMENTS

VERTICAL SILO (VS)

(Note: Vertical silos are potentially very dangerous for entering or maintenance personnel. It is highly advised that before reading further about vertical silos, the reader first visit the appendix of this document to read the "OSHA Fact Sheet for Worker Entry into Grain Storage bins")

VS Manufacturer's Instructions:

Installers and custodians of vertical silos shall follow manufacturers' installation and operating instructions. The following recommendations are intended to support such instructions.

VS Foundation:

VS.Foundation.1 Vertical silos shall have permanent bases/foundations anchored in the earth at an adequate depth to withstand frost.

VS.Foundation.2 Bases shall be of adequate thickness and square area to anchor the silo during wind loading and must carry the weight of a full silo without causing earth subsidence or settling.

VS.Foundation.3 The base shall be made with adequate anchors for permanently fastening the silo to the base/foundation.

VS.Foundation.4 In locations where vehicle traffic or other moving objects may come in contact with silos, bollards, or other protective devices, should be employed.

VS Filling/Emptying Equipment:

VS.F/E.1 Vertical silos shall include a means for determining fuel volume, including but not limited to electronic level sensors, weight sensors, or viewing windows.

VS.F/E.2 If a vertical silo is completely emptied, after re-filling the silo, the heating appliance operator shall confirm that fuel is being properly conveyed to the heating appliance as fines can be a greater problem for funnel flow (45 degree base) silos that have become completely empty after normal use.

VS.F/E.3 Silos designed for auger fill shall have a covered opening located near the top of the silo allowing for the silo to be filled completely. This opening must be weather tight and fully and safely accessible to the operator.

VS.F/E.4 Silos shall have a weatherproof, bug and animal proof air vent located at or above the top fill opening.

VS.F/E.5 If the silo is to be filled pneumatically, the pneumatic fill pipe shall be permanently fixed to the side wall of the silo and have a large radius elbow to allow pneumatically delivered pellets to be delivered at the top of the silo. The pneumatic fill pipe shall be sealed, reach within 5' of the ground, and be fitted with a 4" male camlock fitting. The fitting shall be capped when not in use

VS.F/E.6 Care shall be taken to orient silo pneumatic fill pipes, ladders, and guardrails in such a way that mechanical auger deliveries are not impeded.

VS Bottom Equipment:

VS.Bottom.1 Vertical silos may have as standard equipment a large service opening at or near the base. These service entries shall not be opened by untrained personnel.

VS.Bottom.2 Vertical silos shall have a flanged base that allows for simple connection to mechanical or pneumatic transfer conveyors.

VS.Bottom.3 There shall be a slide gate or other mechanism included at the base of a silo to allow for the maintenance of fuel delivery equipment without emptying the silo.

VS.Bottom.4 The combined heights of gates and fuel delivery equipment shall not be so large as to place silo base equipment in danger of water intrusion.

VS.Bottom.5 A silo base shall include a means for determining if fuel is present such as, but not limited to, a viewing window or transparent section.

VS.Bottom.6 Silos constructed with a 60 degree or steeper base angle will allow mass flow and collect fewer fines than silos constructed with flatter base angles, which normally funnel flow.

VS Access:

VS.Access.7 Entering vertical silos shall be avoided unless absolutely necessary. All vertical silos shall be posted with placards in compliance with OSHA 29 CFR 1910.146.

VS.Access.8 Personnel must be trained and follow work practices as per OSHA 29 CFR 1910.146, before they may enter or gain access to any vertical silo.

VS.Access.9 All fuel conveying equipment must be shut off and/or disabled before a vertical silo is entered.

VS.Access.10 The filling opening at the top of a silo can be used as an access point. If a ladder is used for access to the top opening, this ladder should be installed as per manufacturer's instructions.

VS.Access.11 A ladder shall include equipment that prevents unauthorized use of the ladder.

VS.Access.12 If silos are designed for personnel to walk on the silo roof, a railing or other means of fall protection shall be installed.

VS Lightning Protection:

VS.Lightning.1 Vertical silos shall be grounded to earth.

VS.Lightning.2 When required by code or if installed in a lightning prone location, vertical silos shall include lightning protection equipment.

SITE BUILT INDOOR PELLET STORAGE BINS/ROOMS (SB)

Note: Large volume (> 10 tons), unventilated indoor pellet storage bins can have accumulations of carbon monoxide (CO) from pellet off-gassing and/or depletions of oxygen from conversion of natural components of wood in fresh pellets making them dangerous for human entry. Test the air within a bin for oxygen content and the presence of hazardous gases before entry; provide and continue ventilation until any unsafe atmospheric conditions are eliminated; and if toxicity or oxygen deficiency cannot be eliminated workers must wear appropriate respirators.

SB MANUFACTURER'S INSTRUCTIONS:

It is essential that installers and custodians of indoor site built pellet storage bins follow manufacturer's installation and operating instructions in case of pre-manufactured bins.

SB ENGINEERING INSTRUCTIONS:

It is essential that installers and custodians of indoor site built pellet storage bins follow engineering drawings and/or specifications.

SB VENTILATION INSTRUCTIONS:

Indoor, site built pellet storage bins must achieve ventilation rates, between the storage bin and the outdoors, of at least 2 cfm per ton of pellet storage capacity either through passive or active ventilation means. Passive ventilation is preferred for reliability. Passive ventilation should be based on airflow velocity through openings of no greater than 1 mph. If active ventilation is indicated, fractional horsepower motors should be avoided.

These instructions assume a CO off-gassing rate of 0.9mg/kg/24 hours and pellet storage temperature of 20° C. If site built storage will have a higher ambient temperature than 20° C CO off-gassing could be increased, so an engineer must be consulted to determine required ventilation rates to maintain the concentration of CO in the storage bin, at or below, the acceptable 8 ppm level.

SB FOUNDATION:

SB.Foundation.1 The load bearing capacity of the floor system shall be adequate to carry the weight of a full storage bin without causing settling or cracking of a concrete floor.

SB.Foundation.2 An adequate number of framing members shall be used to distribute the bin load over the entire bin floor area.

SB.Foundation.3 Indoor, site built pellet storage bins should be raised off the floor to protect pellets from free standing water where flooding and/or ground water seepage can occur.

SB.Foundation.4 Indoor pellet storage rooms located in rooms with a history of flooding shall be equipped with a water sump system.

SB Structural walls:

SB.Structural.1 The load bearing capacity of vertical walls shall be adequate to withstand the lateral pressure of a full storage bin without causing bulging or deformation of the wall.

SB.Structural.2 Indoor pellet storage bins shall have sloping surfaces leading to the fuel delivery mechanism. A minimum slope of 45° is required.

SB.Structural.3 Sloped surfaces shall be constructed of very smooth materials that will allow whole pellets, fines, and dust to slide to the fuel delivery mechanism. Hardboard, finished grade plywood, melamine, sheet metal and other similar surfaces are ideal.

SB.Structural.4 Interior surfaces shall be made of sound materials that will not easily degrade or fragment from pellet contact. Loose debris of any sort must be avoided.

SB Filling/Emptying Equipment:

SB.F/E.1 Indoor, site built pellet storage bins shall include a means for determining fuel volume.

SB.F/E.2 If a site-built indoor pellet storage bin/room is completely emptied, after re-filling of the bin/room, the heating appliance operator shall confirm that fuel is being properly conveyed to the heating appliance as fines can be a problem for bins/rooms that have become completely empty after normal use.

SB Bottom Equipment:

SB.Bottom.1 Indoor pellet storage bins shall have a service opening. Service openings shall not be opened by untrained personnel.

SB Access:

SB.Access.1 Entering indoor pellet storage bins shall be avoided unless absolutely necessary. All site built storage shall be posted with placards in compliance with OSHA 29 CFR 1910.146.

SB.Access.2 Personnel must be trained and follow work practices as per OSHA 29 CFR 1910.146 before entering or gaining access to any site built, indoor pellet storage bin.

SB.Access.3 All fuel conveying equipment must be shut off and/or disabled before the indoor, site built pellet storage bin is entered.

SB.Access.4 Each site built, indoor pellet storage bin/room shall have at least 1 access point.

SB Static Electricity:

Metal indoor pellet storage bins shall be grounded to earth.

Fabric storage units (flexible silos) (FS)

Note: There are several styles of fabric storage units currently available in the market. The standards below are written for units that are made from anti-static material that is pervious to gaseous transfer and virtually impervious to dust transfer. Because of these attributes these storage units can accept a single pneumatic hose fill without the need for a vent hose. These standards may not be directly applicable to flexible silos that require both a fill hose and a suction hose because of fabric gaseous impermeability.

FS Manufacturer's installation instructions:

As with all heating equipment, flexible storage units must be installed following the manufacturer's listed installation manual.

FS Storage room characteristics:

FS.Storage.1 The storage room floor must be flat. Imperfections can be addressed with shimming.

FS.Storage.2 The storage room floor must have the capacity to carry the load of the filled storage unit.

FS.Storage.3 The storage unit must not touch wet surfaces.

FS.Storage.4 The storage unit must not be in direct sunlight or be exposed to any precipitation.

FS Pressure relief:

The room in which the storage unit is assembled must have sufficient ventilation to allow for the escape of pressurized air introduced to the room during the delivery process and to allow for diffusion of gases released from pellets during their aging. A minimum 26.5 square inch opening is recommended (6" round). This can be the same opening that provides make-up air for the boiler if the source is external. This can also be one of the passive ventilation ports used to control CO off-gassing for storage units of up to 9 tons.

FS Filling and emptying:

FS.F/E.1 Flexible fabric silos shall be gas permeable and nearly totally dust impermeable. This enables single pneumatic hose filling. Because pneumatic filling pressurizes the silo and, thereby, the room in which the silo is situated must have adequate ventilation to release that increased pressure from the storage room. For residential sized flexible silos (3-9 tons), 26.5 square inches of pressure relief to the outdoors is adequate.

FS.F/E.2 Fill pipes leading from the hose coupling (Camlock) outside the house shall be of metal and should have the minimum number of wide radius bends possible. Diesel exhaust pipe elbows typically have turn radii that are too short and damage pellets on filling.

FS.F/E.3 The flexible fabric silo can have load cells under the legs to measure bag weight to allow owners to know when to order refills; they can have capacitive sensors suspended in the bag to report pellet depth; and, they can be "measured" visually by feeling the level of fill from the outside of the bag.

FS.F/E.4 The bottom of the flexible silo shall be configured to accept a base assembly that mates with either an auger system or a vacuum system as required. That base assembly shall have a slide gate to allow for the maintenance of fuel delivery equipment without emptying the silo.

FS.F/E.5 A flexible fabric silo shall not be entered. Cleaning dust from the silo annually is important but can be accomplished without entry.

FS IMPINGEMENTS:

On many flexible fabric silos, the top of the bag, above the top structural members, inflates during filling. Ensure that there are no impingements, such as floor joists, lighting, water or sewer pipes, etc. that hamper this inflation and expose sections of fabric to the direct impact of the pellets during filling. Holes in the fabric may result quickly. Exposed floor joists above a flexible fabric silo shall be sheathed with drywall, plywood, or other suitable material, over the entire flexible fabric silo to prevent damage to pellets or the silo during filling.

FS GROUNDING:

FS.Grounding.1 Metal fill pipe of the storage unit shall be grounded as per installation manual instructions.

FS.Grounding.2 Pneumatic delivery trucks shall have anti-static, or grounded, hose when connecting to the grounded flexible fabric silo.

See Figure #11 in the Appendix for an illustration on grounding a pellet storage unit.

APPENDIX

Figure 1: Bulk pellet fuel delivery track

Figure 2: Exterior bulk wood pellet silo

Figure 3: Interior bulk wood pellet storage

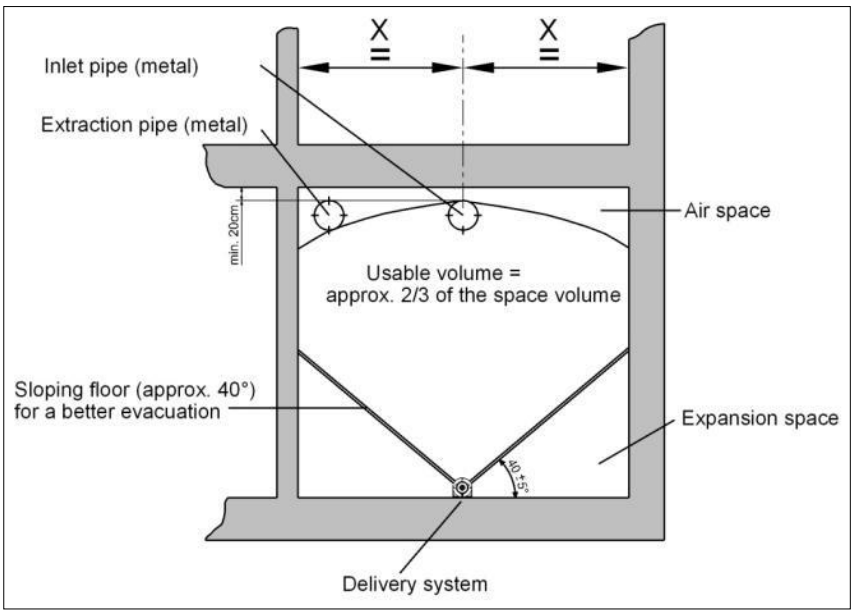

Figure 4: Plan view of interior wood pellet storage room

[Company Logo]

Delivery Ticket

Date:_____ Wood Pellet Manufacturer and Mill

Location:_____
_____

Delivery Personnel Name:_____

Customer Name and Address:_____
_____

Weight of Fuel Delivered_____Pounds

Grade of Fuel Delivered_____

Time of Delivery_____PM/AM (circle one)

Length of Delivery Pipe Needed:_____Feet.

Approximate Length of delivery pipe from exterior connections to storage device:_____Feet.

Type of Storage Bin_____

On-site Checklist:

Checked at Time of Delivery	Yes	No
Overhead Power Lines		
Adequate Venting of Storage Device (over-pressure)		
Storage device closed (all access ways)		
Nature and quantity of fuel remaining in storage device		
Adequate overhead space for cloth bag expansion		
Heating appliance switched off prior to start of delivery		
Post delivery quality and cleanliness check		
Re-start the heating appliance if necessary		

Notes: (For example, deficiencies in grounding or other shortcomings of site or conditions, delicious cookies offered by grateful home owner)

Product has been properly delivered and paid in full.

Delivery Agent
Signature_____**Date**_____

Receiving Customer
Signature_____**Date**_____

Figure 5: Sample bulk wood pellet Delivery Ticket form

Figure 6.1: Camlock connection

Figure 6.2: Camlock connection, alternative view

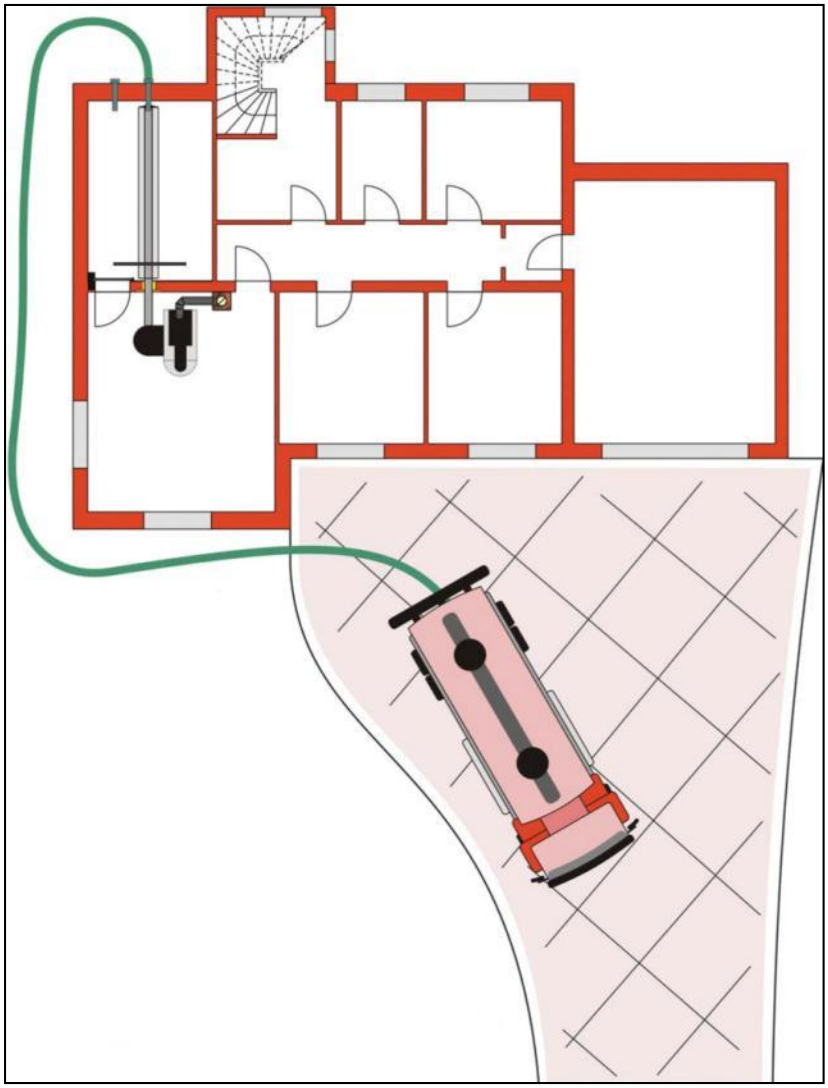

Figure 7: Plan view of delivery truck with hose deployed in driveway

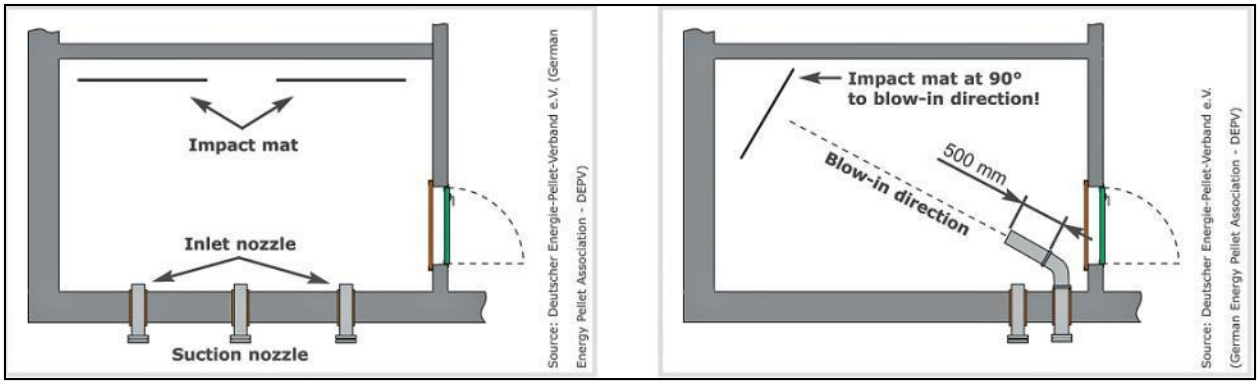

Figure 8: Abrasion management diagrams for wood pellet storage

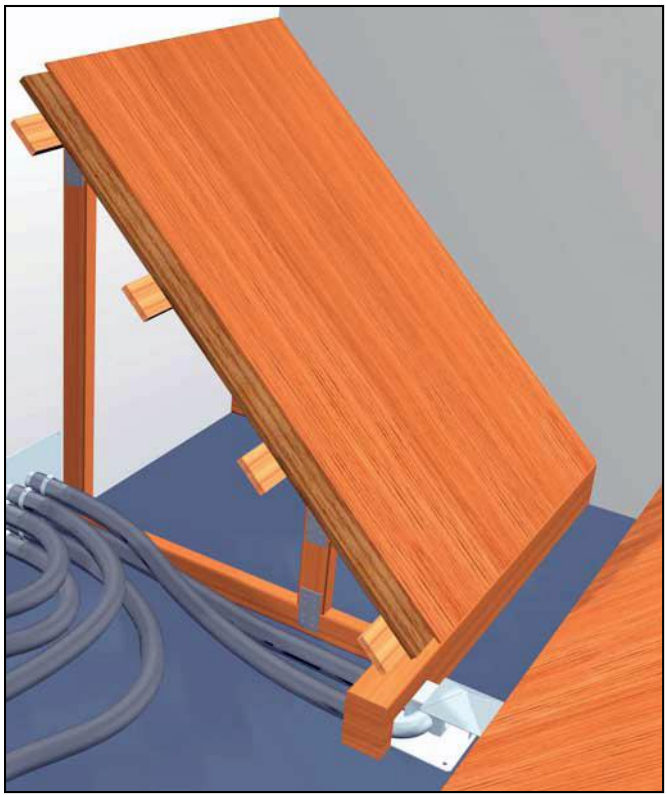

Figure 9.1: Sloping floor illustration

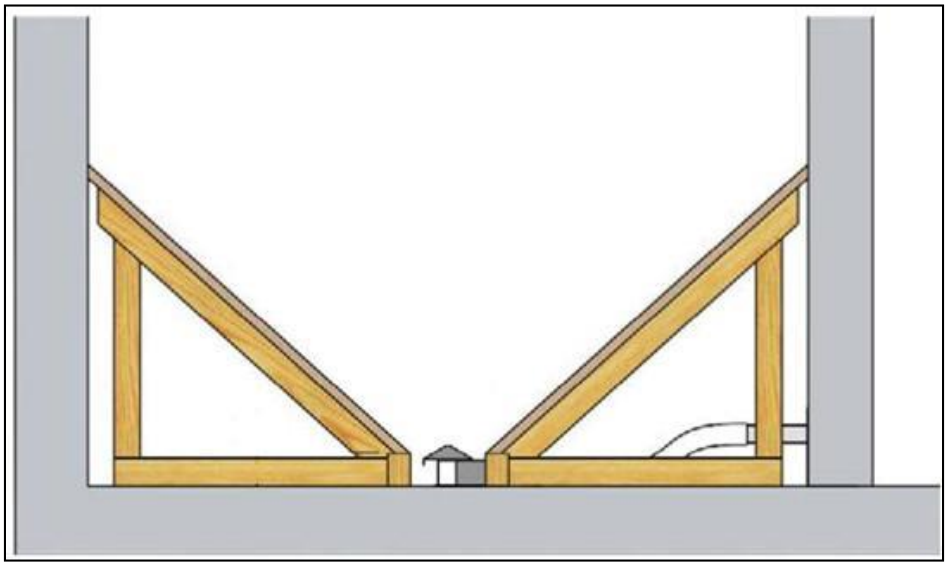

Figure 9.2: Sloping floor illustration, alternative view

Figure 10: Sample wood pellet storage room warning placard

Figure 11: Grounding for wood pellet storage container